TAMEO KITS
website: www.tameokits.com
TMK 312
Brabham Alfa Romeo BT45
PRESS VERSION 1975

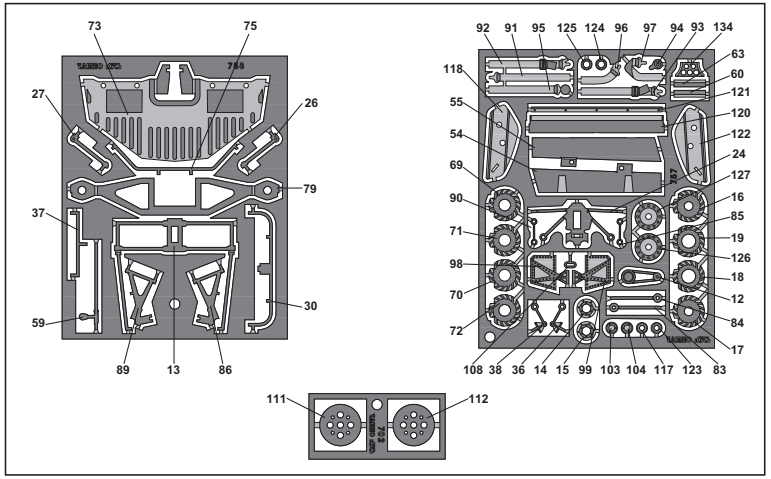
73
75
27
26
79
37
30
59
89
13
86
92 91 95 125 124 96 97 94 93 134
118
63
60
55
121
54
120
122
69
24
127
90
16
85
71
19
126
98
18
70
12
84
72
17
108 38 36 14 15 99 103 104 117 123 83
111
112

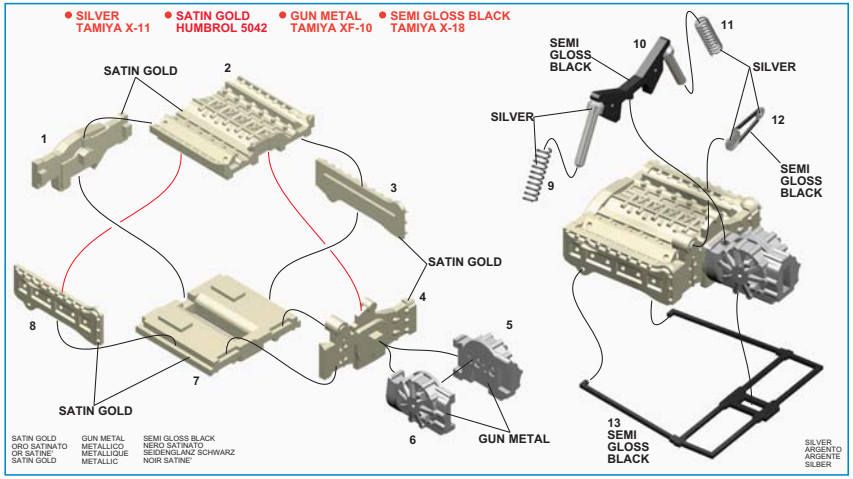
• SILVER TAMIYA X-11
• SATIN GOLD HUMBROL 5042
• GUN METAL TAMIYA XF-10
• SEMI GLOSS BLACK TAMIYA X-18
SATIN GOLD
2
1
3
SATIN GOLD
4
8
5
7
SATIN GOLD
6
GUN METAL
SEMI GLOSS BLACK
10
11
SILVER
SILVER
12
9
SEMI GLOSS BLACK
13 SEMI GLOSS BLACK
SATIN GOLD ORO SATINATO OR SATINE' SATIN GOLD
GUN METAL METALLICO METALLIQUE METALLIC
SEMI GLOSS BLACK NERO SATINATO SEIDENGLANZ SCHWARZ NOIR SATINE'
SILVER ARGENTO ARGENTE SILBER

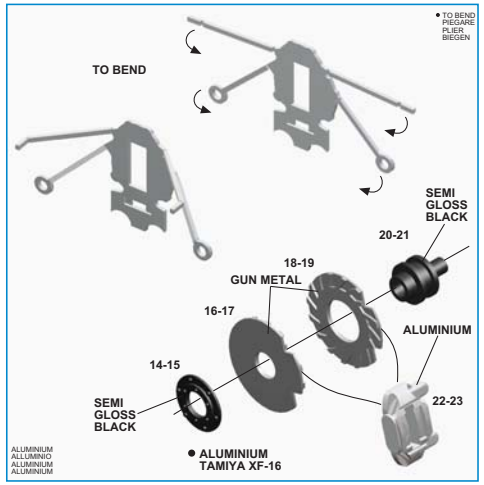
• TO BEND PEGARE PLIER BIEGEN
TO BEND
SEMI GLOSS BLACK
20-21
18-19
GUN METAL
16-17
ALUMINIUM
14-15
22-23
SEMI GLOSS BLACK
• ALUMINIUM TAMIYA XF-16
ALUMINIUM ALLUMINIO ALUMINIUM ALUMINIUM

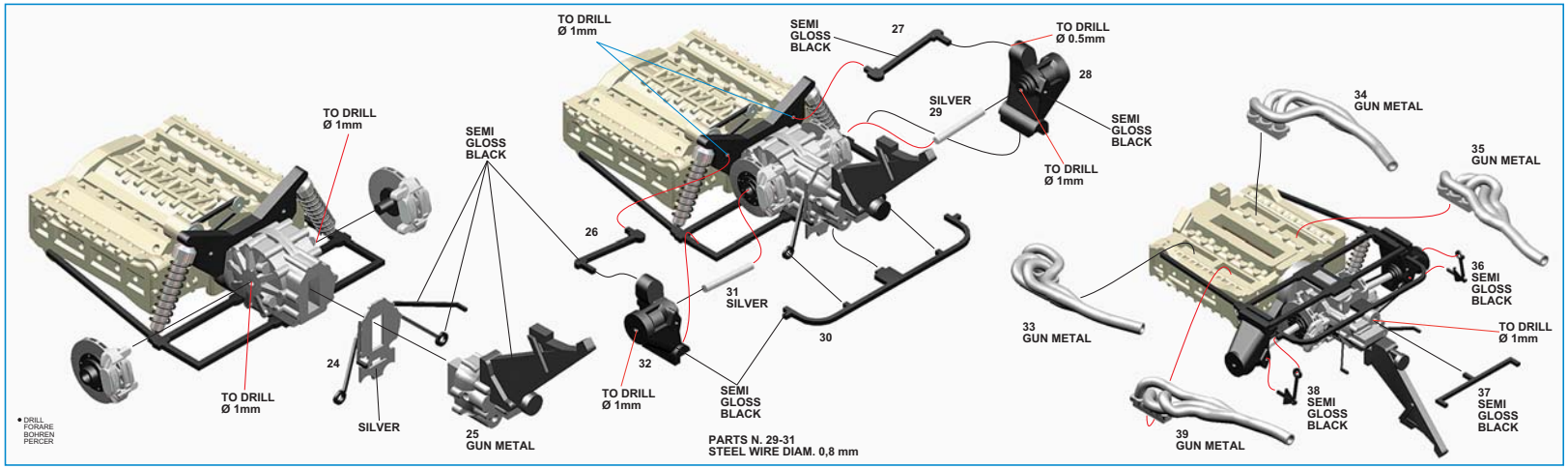
TO DRILL Ø 1mm
SEMI GLOSS BLACK
27
TO DRILL Ø 0.5mm
28
SILVER 29
SEMI GLOSS BLACK
TO DRILL Ø 1mm
34 GUN METAL
35 GUN METAL
TO DRILL Ø 1mm
SEMI GLOSS BLACK
26
31 SILVER
30
33 GUN METAL
36 SEMI GLOSS BLACK
TO DRILL Ø 1mm
24
32
TO DRILL Ø 1mm
SEMI GLOSS BLACK
38 SEMI GLOSS BLACK
37 SEMI GLOSS BLACK
TO DRILL Ø 1mm
SILVER
25 GUN METAL
39 GUN METAL
• DRILL FORARE BOHREN PERCER
PARTS N. 29-31 STEEL WIRE DIAM. 0,8 mm

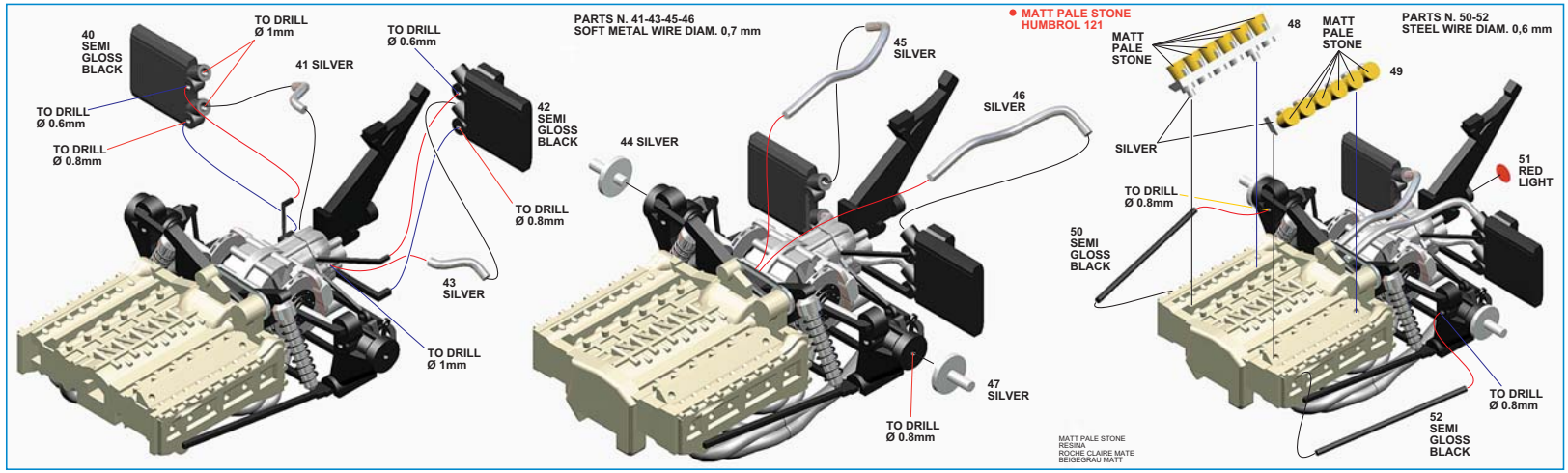
40 SEMI GLOSS BLACK
TO DRILL Ø 1mm
TO DRILL Ø 0.6mm
41 SILVER
TO DRILL Ø 0.6mm
TO DRILL Ø 0.8mm
42 SEMI GLOSS BLACK
TO DRILL Ø 0.8mm
43 SILVER
TO DRILL Ø 1mm
PARTS N. 41-43-45-46 SOFT METAL WIRE DIAM. 0,7 mm
45 SILVER
46 SILVER
44 SILVER
47 SILVER
TO DRILL Ø 0.8mm
• MATT PALE STONE HUMBROL 121
MATT PALE STONE
48
MATT PALE STONE
49
PARTS N. 50-52 STEEL WIRE DIAM. 0,6 mm
SILVER
51 RED LIGHT
TO DRILL Ø 0.8mm
50 SEMI GLOSS BLACK
TO DRILL Ø 0.8mm
52 SEMI GLOSS BLACK
MATT PALE STONE RESINA ROCHE CLAIRE MATE BEIGEGRAU MATT

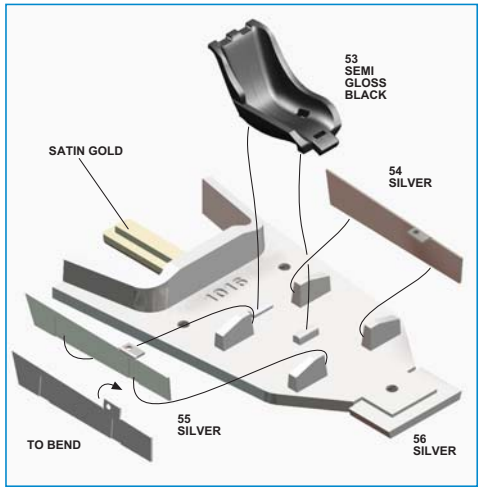
53 SEMI GLOSS BLACK
SATIN GOLD
54 SILVER
55 SILVER
TO BEND
56 SILVER

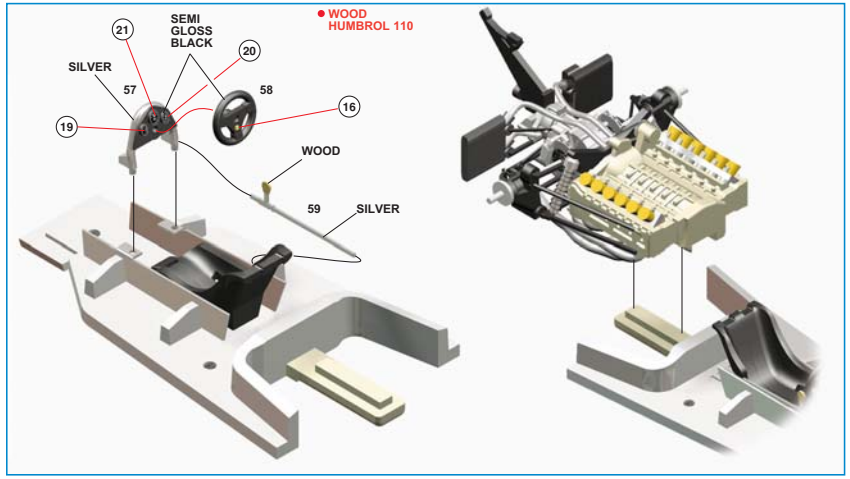
WOOD
HUMBROL 110
21
SEMI
GLOSS
BLACK
20
SILVER
57
58
19
16
WOOD
59
SILVER

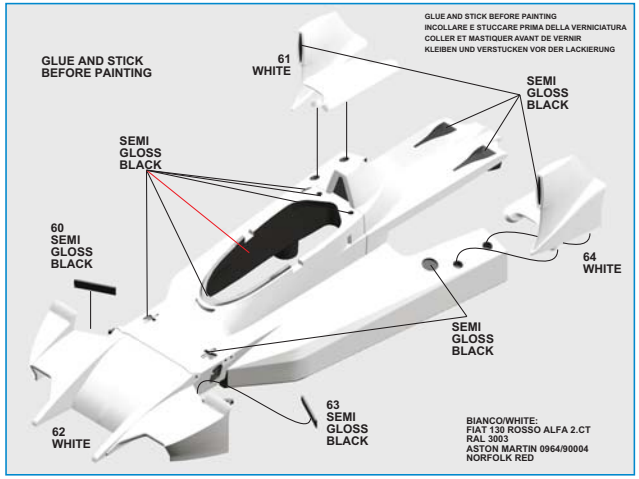
GLUE AND STICK BEFORE PAINTING
INCOLLARE E STUCCARE PRIMA DELLA VERNICIATURA
COLLER ET MASTIQUER AVANT DE VERNIR
KLEIBEN UND VERSTUCKEN VOR DER LACKIERUNG
GLUE AND STICK
BEFORE PAINTING
61
WHITE
SEMI
GLOSS
BLACK
SEMI
GLOSS
BLACK
60
SEMI
GLOSS
BLACK
64
WHITE
SEMI
GLOSS
BLACK
63
SEMI
GLOSS
BLACK
62
WHITE
BIANCO/WHITE:
FIAT 130 ROSSO ALFA 2.CT
RAL 3003
ASTON MARTIN 0964/90004
NORFOLK RED

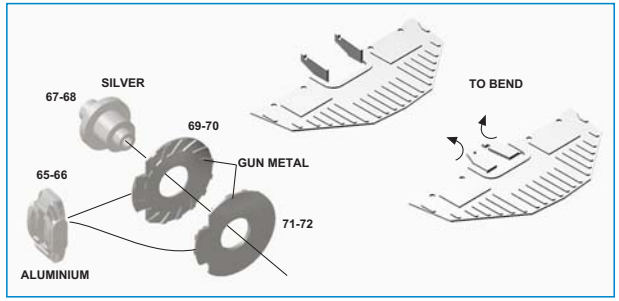
SILVER
67-68
69-70
GUN METAL
65-66
71-72
ALUMINIUM
TO BEND

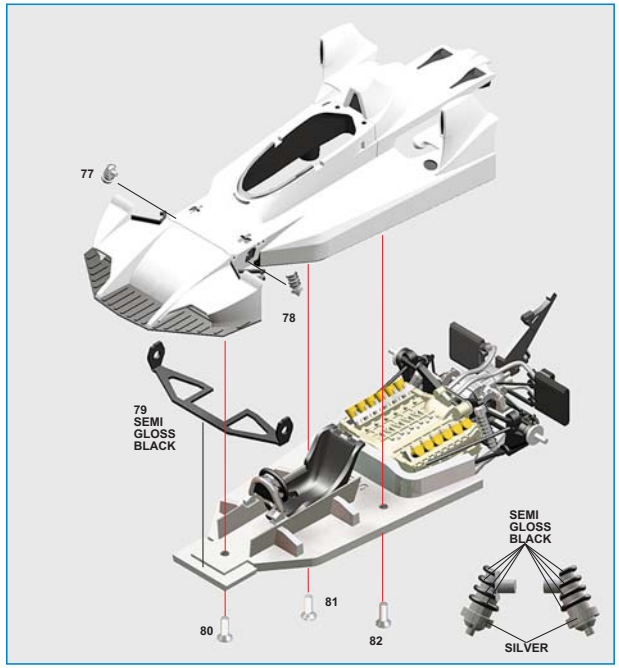
77
78
79
SEMI
GLOSS
BLACK
80
81
82
SEMI
GLOSS
BLACK
SILVER

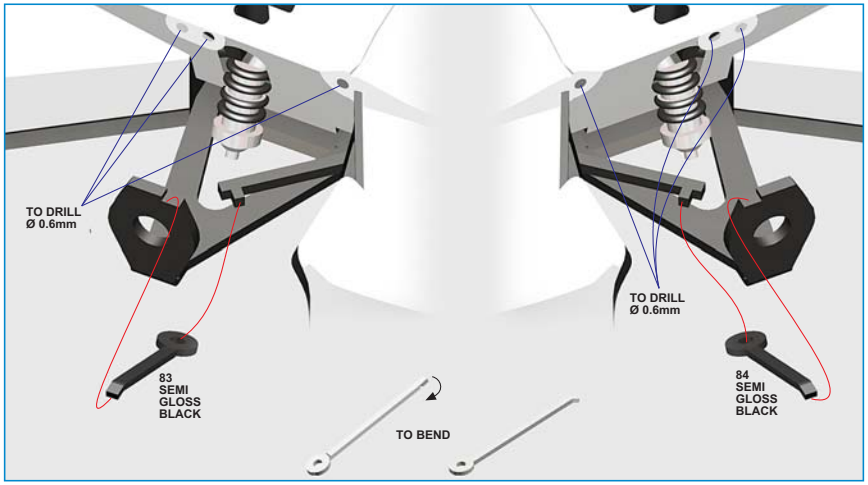
TO DRILL
Ø 0.6mm
TO DRILL
Ø 0.6mm
83
SEMI
GLOSS
BLACK
84
SEMI
GLOSS
BLACK
TO BEND

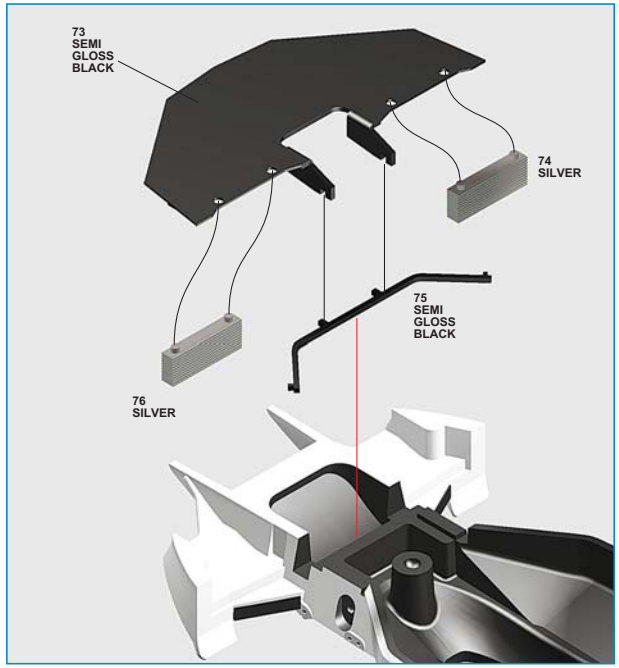
73
SEMI
GLOSS
BLACK
74
SILVER
75
SEMI
GLOSS
BLACK
76
SILVER

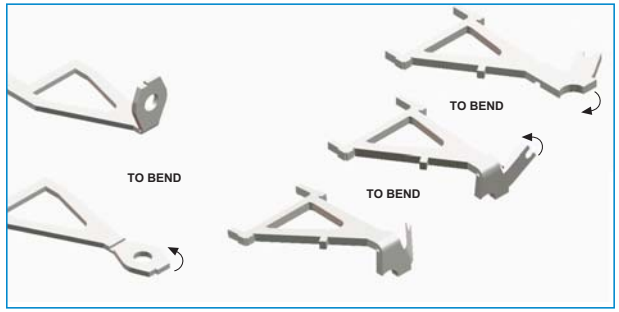
TO BEND
TO BEND
TO BEND

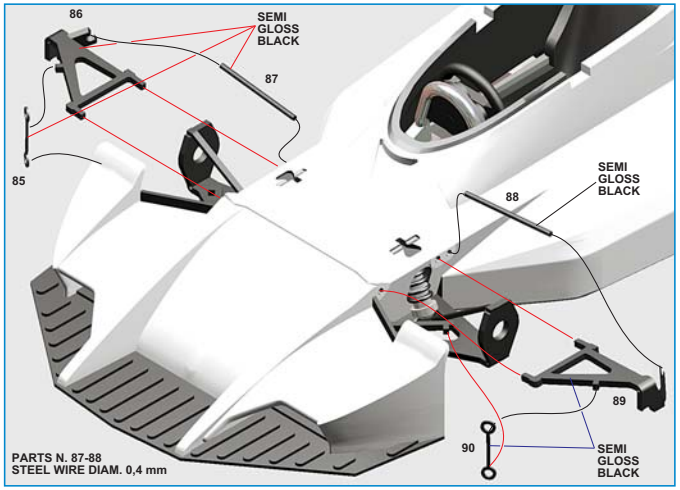
86
SEMI
GLOSS
BLACK
87
85
88
SEMI
GLOSS
BLACK
89
90
SEMI
GLOSS
BLACK
PARTS N. 87-88
STEEL WIRE DIAM. 0,4 mm

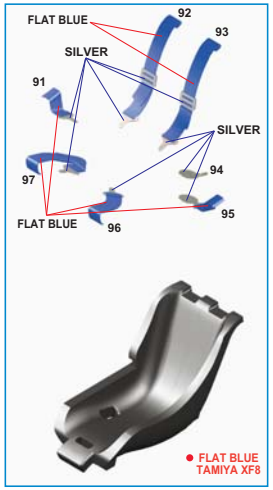
FLAT BLUE
92
93
SILVER
91
SILVER
97
94
95
FLAT BLUE
96
FLAT BLUE
TAMIYA XF8

GOODYEAR
FINA
7
FINA
GOODYEAR
FINA
CHAMPION
GOODYEAR
TAMEO ARCHIVES

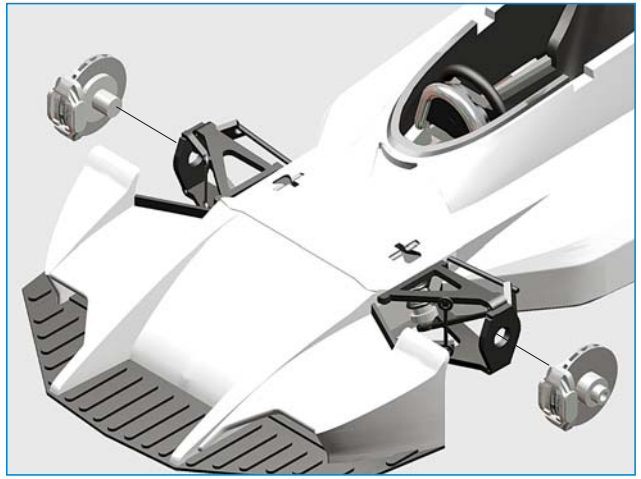

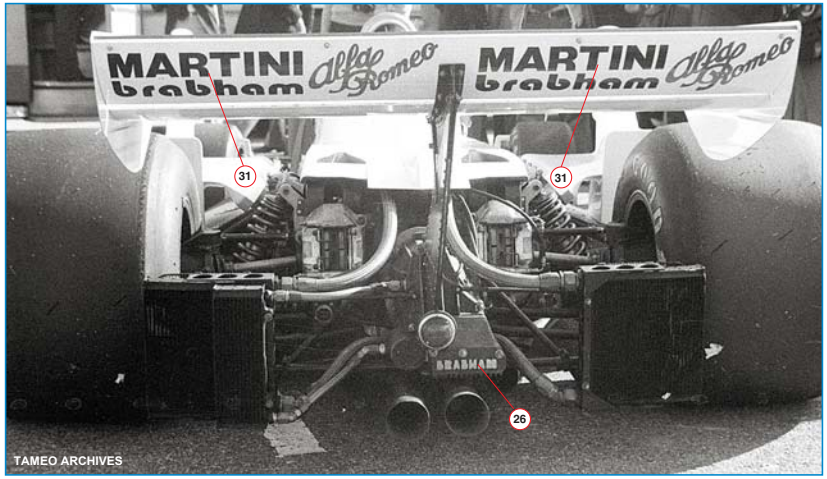
MARTINI brabham Alfa Romeo
MARTINI brabham Alfa Romeo
31
31
26
BRABHAM
TAMEO ARCHIVES

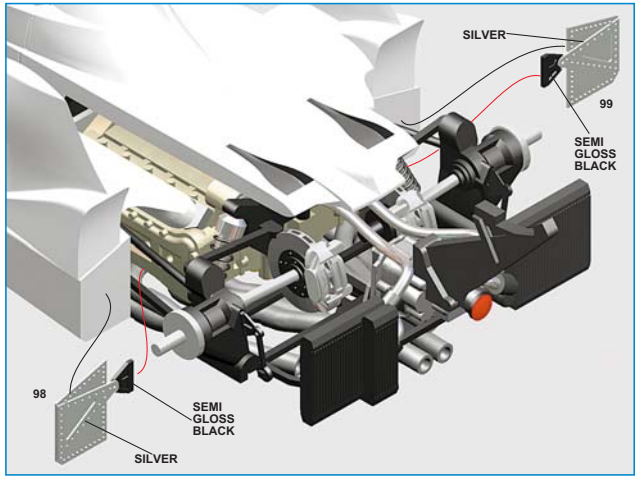
SILVER
99
SEMI GLOSS BLACK
98
SEMI GLOSS BLACK
SILVER

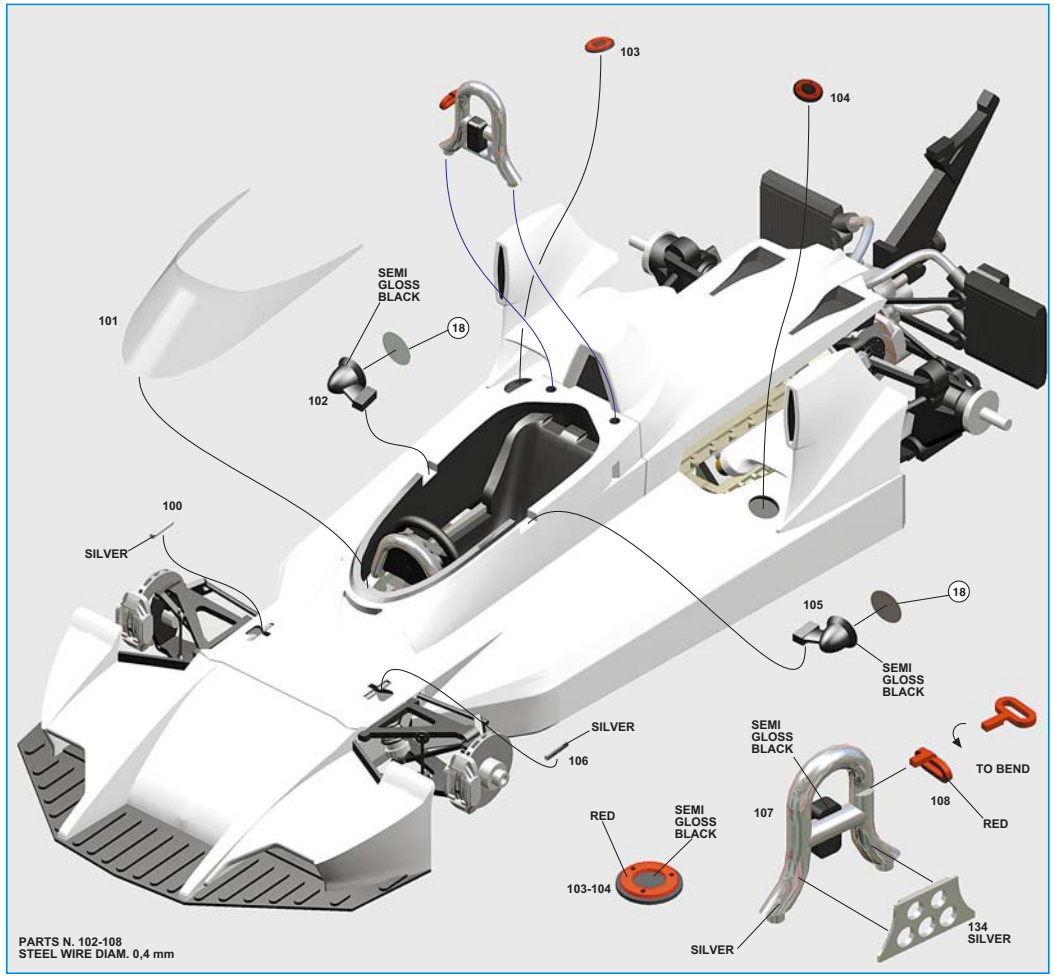
103
104
101
SEMI GLOSS BLACK
18
102
100
SILVER
105
18
SEMI GLOSS BLACK
SILVER
106
SEMI GLOSS BLACK
TO BEND
108
RED
RED
SEMI GLOSS BLACK
107
103-104
SILVER
134 SILVER
PARTS N. 102-108
STEEL WIRE DIAM. 0,4 mm

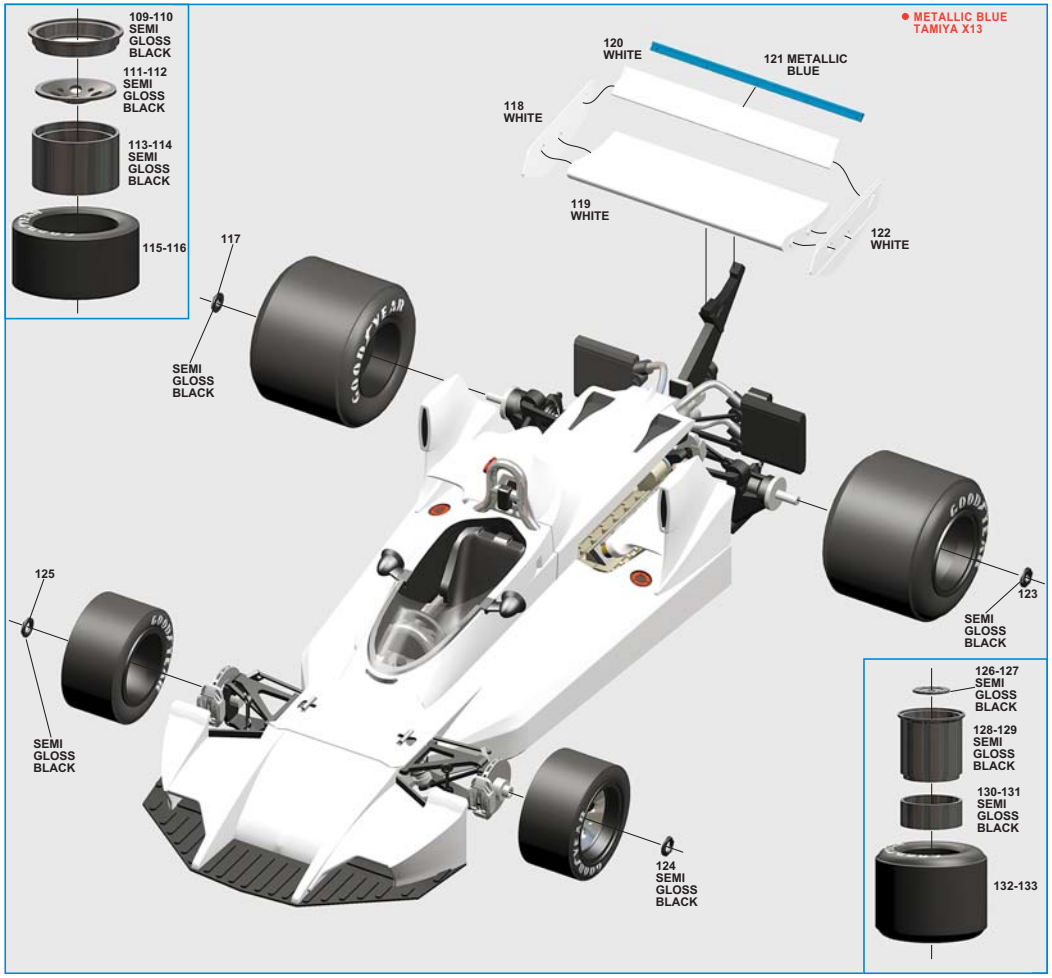
109-110 SEMI GLOSS BLACK
111-112 SEMI GLOSS BLACK
113-114 SEMI GLOSS BLACK
115-116
METALLIC BLUE TAMIYA X13
120 WHITE
121 METALLIC BLUE
118 WHITE
119 WHITE
122 WHITE
117
SEMI GLOSS BLACK
125
SEMI GLOSS BLACK
123
SEMI GLOSS BLACK
124 SEMI GLOSS BLACK
126-127 SEMI GLOSS BLACK
128-129 SEMI GLOSS BLACK
130-131 SEMI GLOSS BLACK
132-133

TAMEO KITS
WWW.TAMEOKITS.COM

TMK 312
BRABHAM ALFA ROMEO BT45
PRESS VERSION 1975

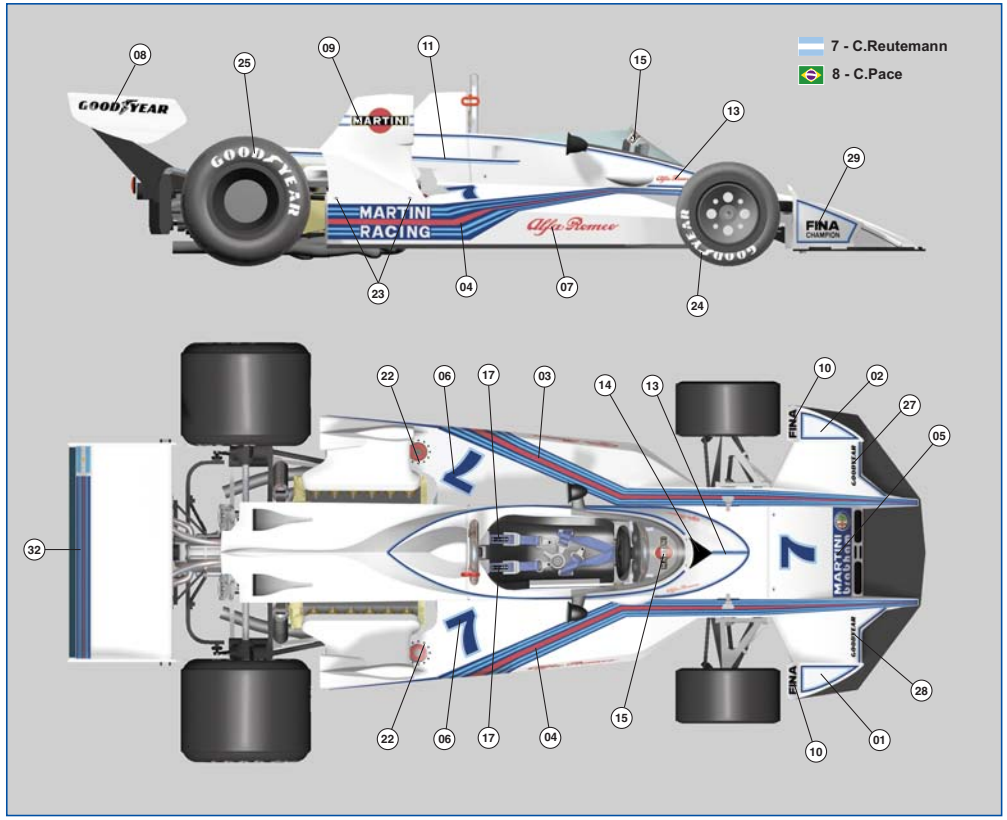

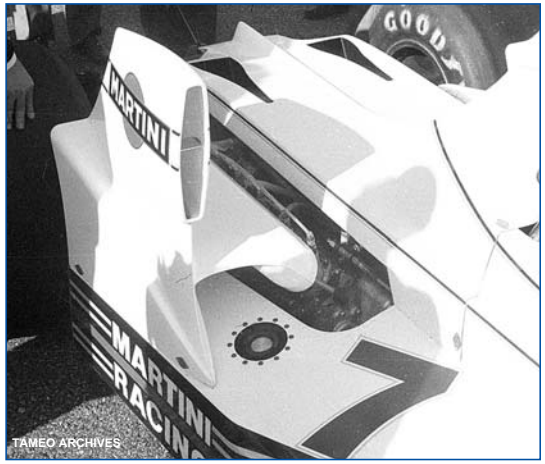

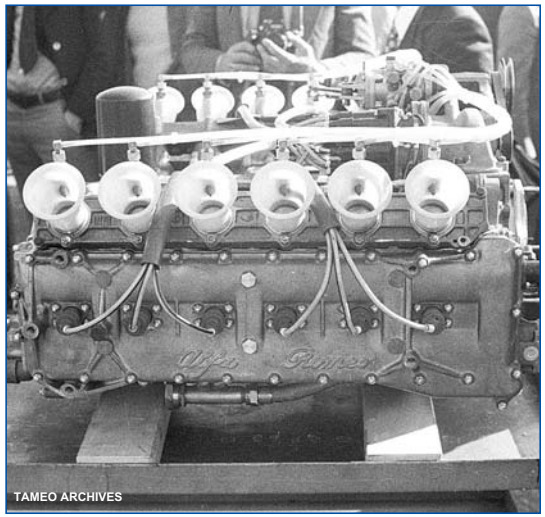

TAMEO KITS formula one scale model

Per ulteriori immagini visitate la galleria fotografica nel nostro sito ufficiale www.tameokits.com
For further images visit the photo gallery in our official web site www.tameokits.com

TAMEO KITS srl
Viale C.Colombo, 36-38
17022 BORGIO VEREZZI SV ITALY
Tel. 39 019 - 615.250 Fax. 39 019 - 615.310
e-mail sales@tameokits.com
e-mail technical@tameokits.com

Made in Italy. Collector 1/43 Scale Models. Vietata la vendita ai minori di 14 anni. Nocivo per ingestione. Conservare fuori dalla portata dei bambini. Tameo Kits declina ogni responsabilità per un uso improprio del prodotto.

Made in Italy. Collector 1/43 Scale Models. Not for sale to persons under 14 years of age. Dangerous if swallowed. Keep out of reach of children. Tameo Kits not held responsable for any damage or injury resulting from improper use of the product.

Made in Italy. Collector 1/43 Scale Models. Vente interdite aux enfants de moins de 14 ans. Dangereux si avalé. Conserver hors de la portée des enfants. Tameo Kits décline toute responsabilité dans le cas de dommages dérivants de l'usage non approprié du produit.

Made in Italy. Collector 1/43 Scale Models. Verkauf an judendliche unter 14 Jahren verboten. Schadlich bei Einnahme. Von Kindern ferhalten. Tameo Kits Lehnt jene Verantwortung bei unkorrektem Gebraucht seines Produktes ab.