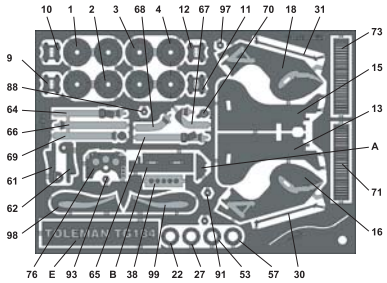


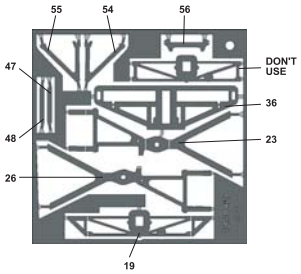


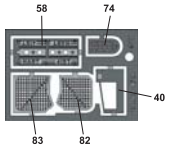


# TAMEO KITS

## TMK227

### TOLEMAN HART Tg184

### MONACO G.P. 1984


TAMEO KITS srl
Viale C.Colombo, 36-38
17022 BORGIO VEREZZI SV ITALY
Tel. 3919 - 615.250 Fax. 3919 - 615.310
E-Mail tame001@pn.itnet.it



Made in Italy. Collector 1/43 Scale Models. Vietata la vendita ai minori di 14 anni. Nocivo per ingestione. Conservare fuori dalla portata dei bambini. Tameo Kits declina ogni responsabilità per un uso improprio del prodotto.

Made in Italy. Collector 1/43 Scale Models. Not for sale to persons under 14 years of age. Dangerous if swallowed. Keep out of reach of children. Tameo Kits not held responsable for any damage or injury resulting from improper use of the product.

Made in Italy. Collector 1/43 Scale Models. Vente interdite aux enfants de mois de 14 ans. Dangereux si avalé. Conserver hors de la portées des enfants. Tameo Kits déline toute résponsabilité dans le cas de dommages du préjudices dérivant de l'usage non approprié du produit.

Made in Italy. Collector 1/43 Scale Models. Verkauf an jugendliche unter 14 Jahren verboten. Schädlich bei Einnahme. Von Kindern fernhalten. Tameo Kits Lehnt jene Verantwortung bei unkorrektem Gebraucht seines Produktes ab.


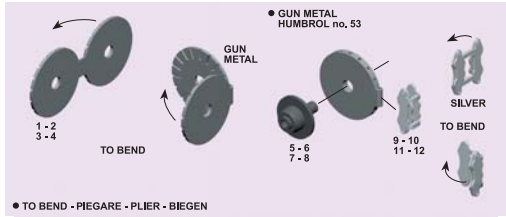


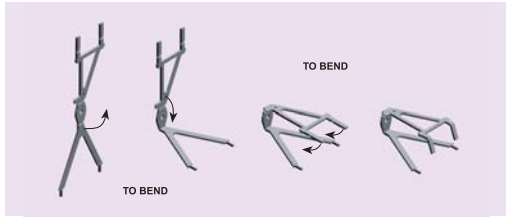


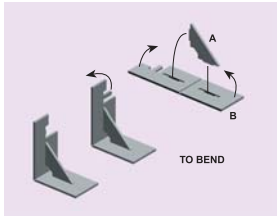


## MONACO G.P. 1984

| | | |
|---|---|---|
| 19 | Ayrton Senna | 2nd. |
| 20 | Johnny Cecotto | Ret. |

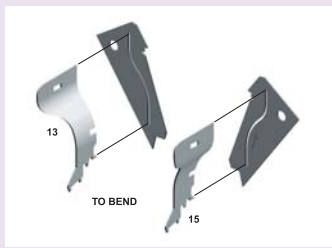


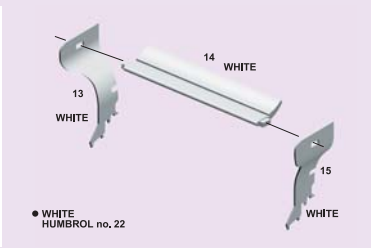

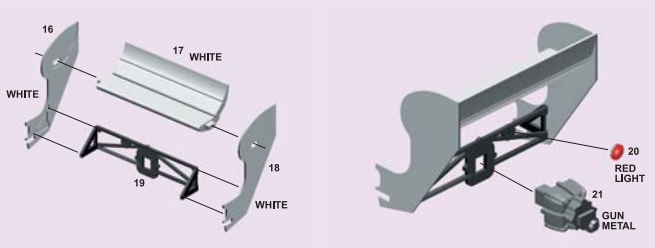

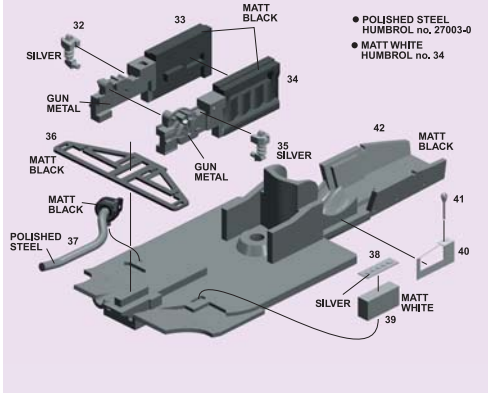


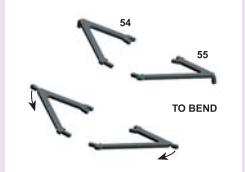


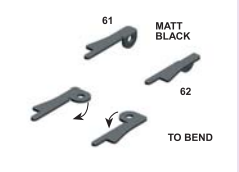


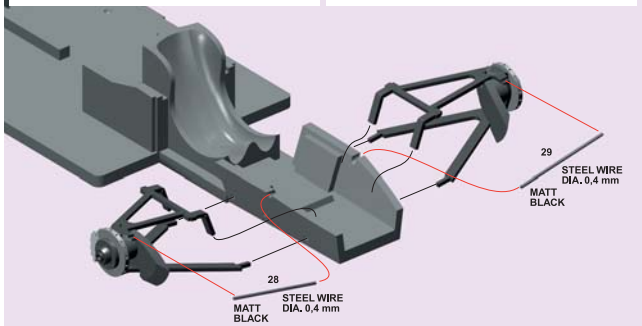


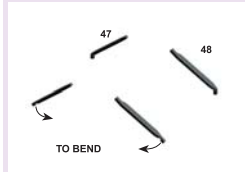


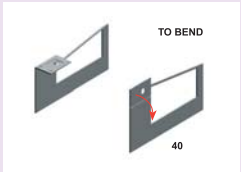


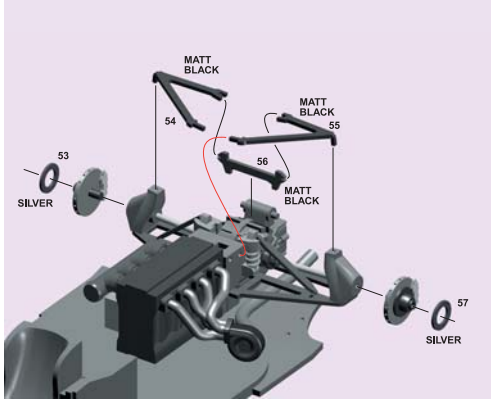


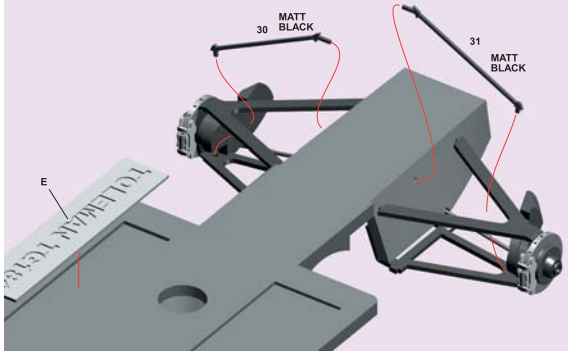


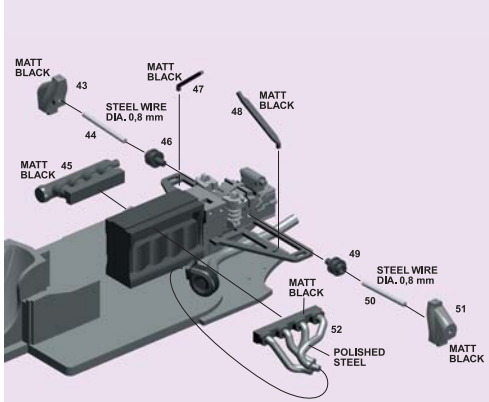


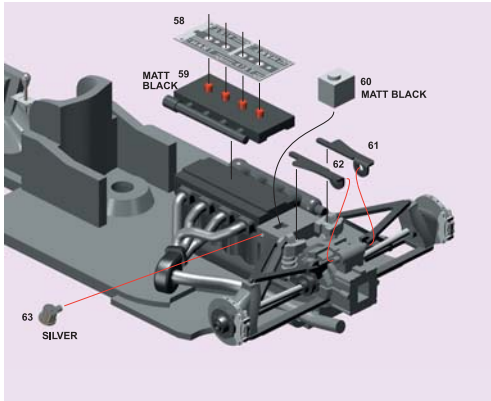

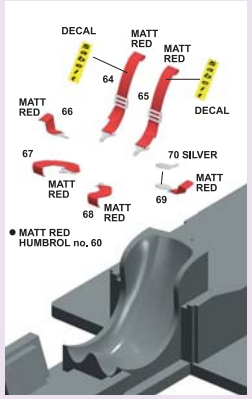
DECAL
MATT RED
MATT RED
64
65
MATT RED
66
DECAL
67
70 SILVER
MATT RED
69
MATT RED
68
MATT RED
● MATT RED HUMBROL no. 60

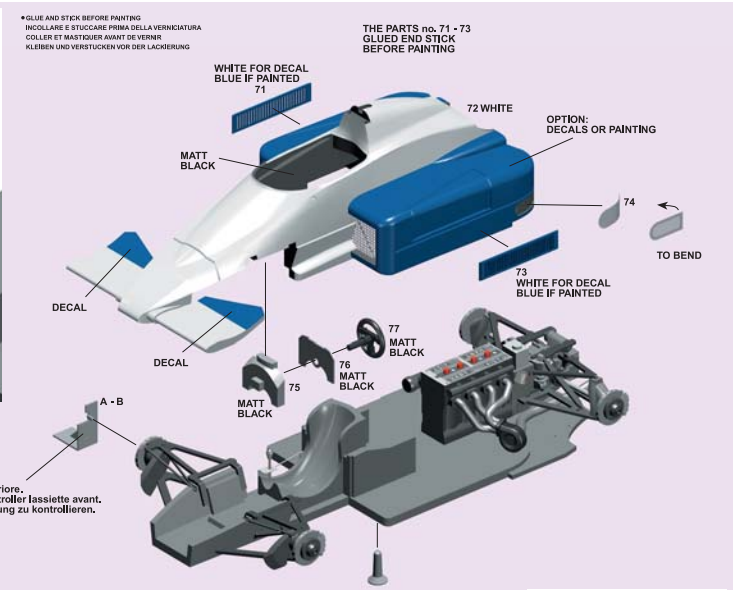
● GLUE AND STICK BEFORE PAINTING
INCOLLARE E STUCCARE PRIMA DELLA VERNICIATURA
COLLER ET MASTIQUER AVANT DE VERNIR
KLEIBEN UND VERSTUCKEN VOR DER LACKIERUNG
THE PARTS no. 71 - 73 GLUED END STICK BEFORE PAINTING
WHITE FOR DECAL BLUE IF PAINTED 71
72 WHITE
OPTION: DECALS OR PAINTING
MATT BLACK
74
TO BEND
73 WHITE FOR DECAL BLUE IF PAINTED
DECAL
DECAL
77 MATT BLACK
76 MATT BLACK
75
MATT BLACK
A - B
Please use this part to check the front trim.
Usare questa parte per controllare l'assetto anteriore.
S'il vous plait de faire usage de ce part pour controller lassiette avant.
Bitte benutzung dieses Teiles, um die Vordertrimung zu kontrollieren.

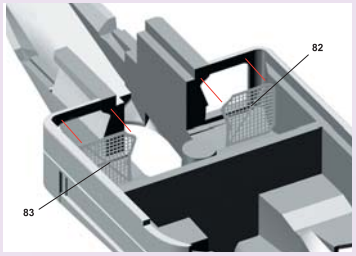
82
83

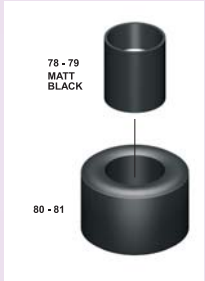
78 - 79 MATT BLACK
80 - 81

84 - 85 MATT BLACK
86 - 87

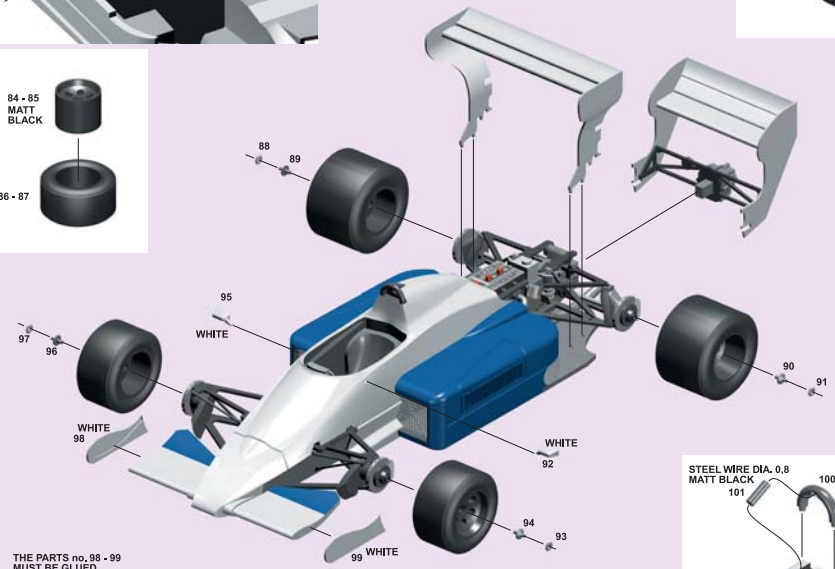
88
89
95
WHITE
97
96
WHITE
98
90
91
WHITE
92
94
93
99 WHITE
THE PARTS no. 98 - 99 MUST BE GLUED BEFORE PAINTING

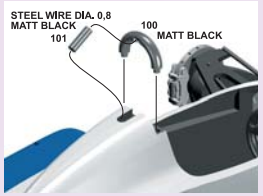
STEEL WIRE DIA. 0,8
MATT BLACK
101
100
MATT BLACK

Agip
Segafredo
Candy
19
SERGIO TACCHINI

Segafredo
Candy
19

Segafredo
Candy
19

● Attention : The pictures has been taken in the tests.
Attenzione : Le foto sono state scattate durante le prove.
Attention : Les Photos ont été fait dans les épreuves.
Achtung : Die Photos wurden während der Probefahrt gemacht.
Segafredo

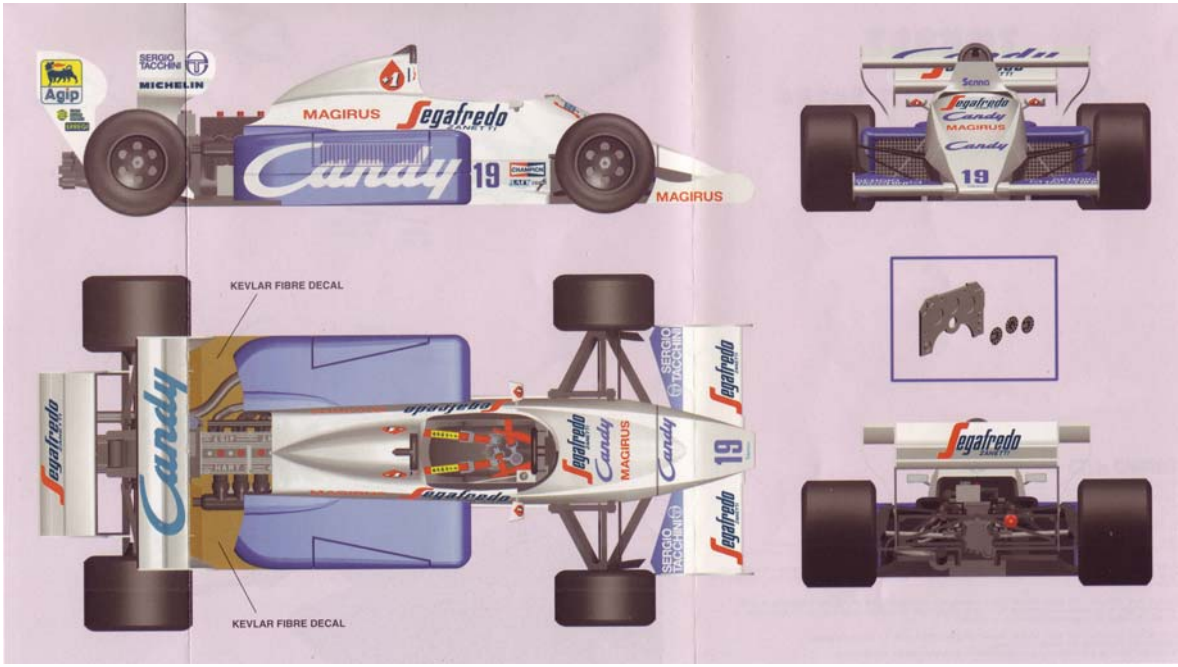
SERGIO TACCHINI
MICHELIN
Agip
MAGIRUS
Segafredo
Candy
19
MAGIRUS
KEVLAR FIBRE DECAL
KEVLAR FIBRE DECAL